BiSS-Interface, electronic datasheet EDS

22.07.2021 st
R63007.0002

1. COMMON PART

The *BiSS* EDS (electronic datasheet) describes the attributes and operational conditions of a BiSS device and carries information about process data and parameter. The BiSS EDS is once per device available.
At Kuebler Absolut-Encoders the EDS starts on bank 3 (defined in Bank 0 address 0x41) and consits of 2 parts (common part and BP3 part), where each part consists on one bank.
The first part (common part) contains non process relevant information and parameters for the master but no process data. Hereto belongs clock frequency, timeout, delay timings etc. Additionally for every available data channel format, length and starting bank address for profile depending content is present.

2. Encoder specific part BP3 (Standard encoder protocol)

The second part (BP3 part) starts on bank 4 and contains required information about transmission, product and process relevant information for the motion control system.
Bank 5 and bank 6 are reserved. Bank 7 until Bank 31 are intended as memory area for user data.

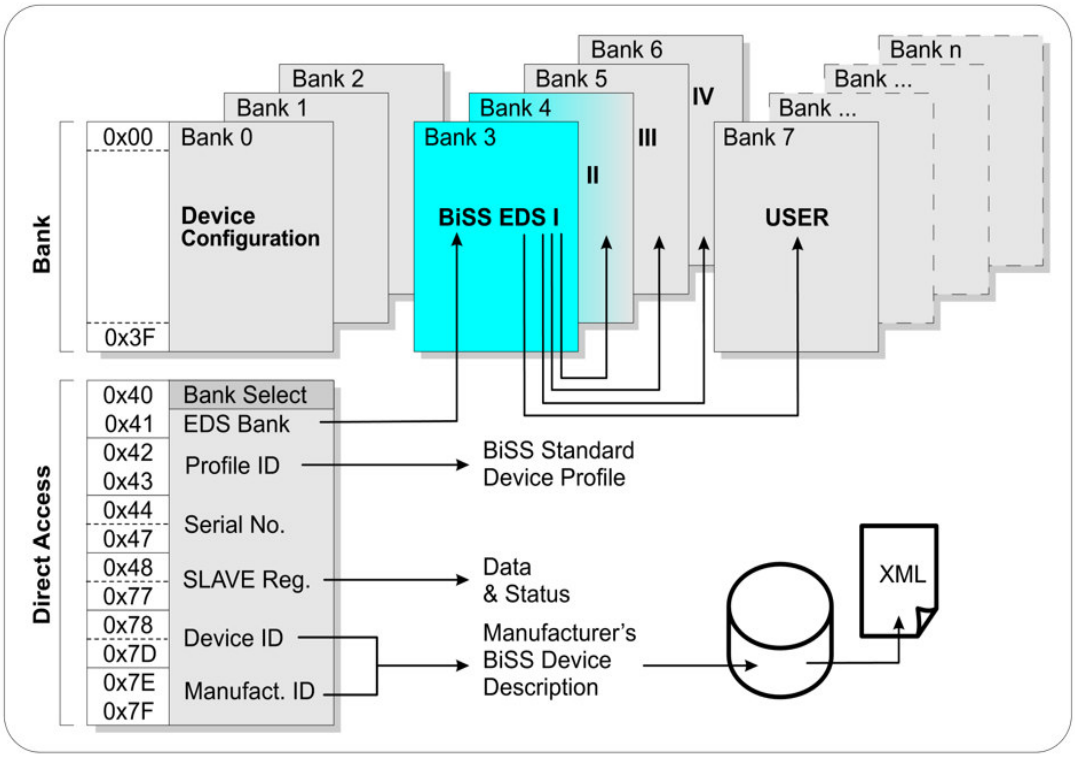

Figure 1: Memory mapping of the EDS

Each BiSS device manufacturer has one manufacturer ID for all BiSS-devices.
Kübler Manufacturer ID: (Adr. 0x7E, 0x7F) 4B, 55

Each BiSS-device has its own Device-ID, located at memory bank 0, Adr. 0x78…0x7D.

Device-IDs: (Adr. 0x78…0x7D) for available BiSS-Encoders with EDS.
5873/53, 10 bit: 01, 00, C0, 0A, 00, 00
5873/53, 11 bit: 01, 00, C0, 0B, 00, 00
5873/53, 12 bit: 01, 00, C0, 0C, 00, 00
5873/53, 13 bit: 01, 00, C0, 0D, 00, 00
5873/53, 14 bit: 01, 00, C0, 0E, 00, 00
5873/53, 17 bit: 01, 00, C0, 11, 00, 00
5873/53, 19 bit: 01, 00, C0, 13, 00, 00
5873/53, 21 bit: 01, 00, C0, 15, 00, 00

Bank 3 COMMON part

Adr.	Symbol	Description	Group	Format	Unit	Value
0x00	EDS_VER	EDS version (continuous number)	Orga	U8	-	**0x01**
0x01	EDS_LEN	EDS length (bank count completely)	Orga	U8	Banks	**0x02**
0x02	USR_STA	Bank address USER start (bank selection in address 64, 255= not available)	Orga	U8	-	**0x07**
0x03	USR_END	Bank address USER end (bank selection address 64)	Orga	U8	-	**0x1F**
0x04	TMA	Minimum permitted clock period on MA (TMA)	Timing	U8	1 ns	**0x64**
0x05	TO_MIN	Minimum *BiSS* timeout (0= adaptive)	Timing	U8	250 ns	**0x28**
0x06	TO_MAX	Maximum *BiSS* timeout (0= adaptive)	Timing	U8	250 ns	**0x44**
0x07	TOS_MIN	Minimum *BiSS* timeout_S (0= adaptive)	Timing	U8	25 ns	**0x28**
0x08	TOS_MAX	Maximum *BiSS* timeout_S (0= adaptive)	Timing	U8	25 ns	**0x44**
0x09	TCLK_MIN	Minimum sampling periode adaptive timeout (0= adaptives timeout not available)	Timing	U8	25 ns	**0x00**
0x0A	TCLK_MAX	Maximum sampling periode adaptive timeout (0= adaptives timeout not available)	Timing	U8	25 ns	**0x00**
0x0B	TCYC	Minimum cycle time (0= no limitation)	Timing	U8	250 ns	**0x00**
0x0C	TBUSY_S	Maximum processing time SCD	Timing	U8	250 ns	**0x16**
0x0D	BUSY_S	Additional processing time SCD in clocks	Timing	U8	TMA	**0**
0x0E	PON_DLY	Maximum "power on delay" until control communication is available	Timing	U16 [1]		**0x00**
0x0F	PON_DLY	Maximum "power on delay" until control communication is available			1 ms	**0x64**
0x10	DC_NUM	Number of data channel in this device (number of words)	SCD	U8	-	**0x01**
0x11	SL_NUM	Area of validity for this EDS (number of slave addresses)	SCD	U8	-	**0x01**
0x12	SL_OFF	Memory location for this EDS (slave ID within this device)	SCD	U8	-	**0x00**
0x13		Reserved				**0x00**
0x14	BANK1	Bank address for content description data channel 1 (profile EDS)	SCD	U8	-	**0x04**
0x15	DLEN1	Data length data channel 1	SCD	U8	bit	**0x…**
0x16	FORMAT1	Data format data channel 1	SCD	U8	bit	**0x0A**
0x17	CPOLY1	CRC polynome(8:1) for data chan.1	SCD	U8	-	**0x21**

Bank 4 BP3 part

Adr.	Symbol	Description	Group	Format	Unit	Value
0x00	BP_VER	BiSS Profile 3 Version	Orga	U8	-	**0x01**
0x01	BP_LEN	Length of this profile	Orga	U8	Banks	**0x01**
0x02	BP_ID	Profile identification BP3 (content also available in adress 0x42 and 0x43)	Orga	U8	Non-safety application	**0x62**
0x03				U8	Numb. of Pos.bits + nE + nW	**0x…**
0x04	FB1	Feedback bit 1	Orga	U8	Errorbit	**0x01**
0x05	FB2	Feedback bit 2	Orga	U8	Warningbit	**0x02**
0x06	PON_PDL	Maximum "power on delay" until position data are available	Timing	U8	100ms	**0x64**
0x07		Reserved	Prot	U8	-	**0x00**
0x08	EN_TYP	Encoder type *(linear oder rotativ)*	Orga	U8	Rotary encoder	**0x00**
0x09	POS_NUM	Position value	Safety	U8	Pos value 1	**0x01**
0x0A	MT_LEN	Data length MULTITURN	Orga	U8	Number of MT-bits	**0x00**
0x0B	MT_FMT	Data format MULTITURN	Meas	U8	left-aligned	**0x00**
0x0C	CO_LEN	Data length COARSE	Orga	U8	Number of digital bits	**0x0B**
0x0D	CO_FMT	Data format COARSE	Meas	U8	Left-aligned	**0x01**
0x0E	FI_LEN	Data length FINE	Orga	U8	Number of Int-bits	**0x…**
0x0F	FI_FMT	Data format FINE	Meas	U8	Left-aligned	**0x01**
0x10	MT_CNT	Number of distinguishable revolutions/periods	Meas	U32 [1]	00 for Singleturn encoders	**0x00**
0x11						**0x00**
0x12						**0x00**
0x13						**0x00**
0x14	SIP_CNT	Number of signal periods per revolution/length of signal periode	Meas	U32 [1]	2048 Per.	**0x00**
0x15						**0x00**
0x16						**0x08**
0x17						**0x00**
0x18	SIP_RES	resolution factor per signal period (LSB of the interpolation)	Mess	U32 [1]	Number of interpolator LSBs	**0x00**
0x19						**0x00**
0x1A						**0x…**
0x1B						**0x…**
0x1C	CPOLY	CRC polynome (32:1) [3]	Orga	U32 [1]	-	**0x00**
0x1D						**0x00**
0x1E						**0x00**
0x1F						**0x21**
0x20	CSTART	CRC start value	Orga	U32 [1]	Default 00	**0x00**
0x21						**0x00**
0x22						**0x00**
0x23						**0x00**
0x24	ABS_ACU	Absolute accuracy	Meas	U16 [1]	n.a.	**0x00**

0x25					n.a.	**0x00**
0x26	REL_ACU	Repeat accuracy	Meas	U16 [1]	n.a.	**0x00**
0x27					n.a.	**0x00**
0x28	SPD_ACU	Angular speed/speed depending accuracy	Meas	U16 [1]	n.a.	**0x00**
0x29						**0x00**
0x2A	HYST	Hysteresis	Meas	U16 [1]	n.a.	**0x00**
0x2B						**0x00**
0x2C	SPD_MAX	Maximum revolution speed/maximum speed	Mech	U16 [1]	n.a.	**0x00**
0x2D					n.a.	**0x00**
0x2E	ACC_MAX	Maximum angular accelleration/maximum acceleration	Mech	U16 [1]	n.a.	**0x00**
0x2F					n.a.	**0x00**
0x30	TMP_MIN	Minimum operating temperature	Mech	U16 [1]	n.a.	**0x00**
0x31						**0x00**
0x32	TMP_MAX	Maximum operating temperature	Mech	U16 [1]	n.a.	**0x00**
0x33						**0x00**
0x34	VLT_MIN	Minimum operating voltage	Elec	U16 [1]	n.a.	**0x00**
0x35						**0x00**
0x36	VLT_MAX	Maximum operating voltage	Elec	U16 [1]	n.a.	**0x00**
0x37						**0x00**
0x38	CUR_MAX	Maximum current consumption	Elec	U16 [1]	n.a.	**0x00**
0x39						**0x00**
0x3A		Reserved	Prot	U8	-	**0x00**
0x3B		Reserved	Prot	U8	-	**0x00**
0x3C		Reserved	Prot	U8	-	**0x00**
0x3D		Reserved	Prot	U8	-	**0x00**
0x3E		Reserved	Prot	U8	-	**0x00**
0x3F	CHKSUM	Checksum (addition of all bytes in this bank)	Orga	U8		