Standard
electronic multiturn, magnetic | **Sendix M5861 (shaft)** | **Analog**

The Sendix M58 with Energy Harvesting Technology is an electronic multiturn encoder without gear and without battery – in the standard format with 58 mm flange.

High robustness and high resolution make this encoder the ideal device for use in demanding applications.

Safety-Lockplus™ | High rotational speed | Temperature range -40° ... +85°C | High protection level IP | High shaft load capacity | Shock / vibration resistant | Reverse polarity protection | Energy Harvesting

Highest robustness

- Sturdy bearing construction in Safety-Lockplus™ design for particularly high resistance.
- Extra large bearings.
- Mechanically protected shaft seal.
- Wide temperature range -40 °C ... +85 °C.
- Without gear and without battery, thanks to the Energy Harvesting technology.

Application oriented

- Current output 4 ... 20 mA.
- Voltage output 0 ... 10 V or 0 ... 5 V.
- Measuring range scalable.
- Limit switch function.

Order code Shaft version

8.M5861	.	X	X	X	X	.	X	X	1	2
Type		a	b	c	d		e	f		

a *Version*
3 = clamping flange, IP65, ø 58 mm [2.28"]
4 = synchro flange, IP65, ø 58 mm [2.28"]

b *Shaft (ø x L), with flat*
1 = ø 6 x 12.5 mm [0.24 x 0.49"]
5 = ø 10 x 20 mm [0.39 x 0.79"]

c *Output circuit* [1]
3 = current output
4 = voltage output

d Type of connection
2 = radial cable, 1 m [3.28'] PVC
B = radial cable, special length PVC *)
4 = radial M12 connector, 5-pin
D = radial M12 connector, 5-pin [2]

*) Available special lengths (connection types B):
2, 3, 5, 8, 10, 15 m [5.56, 9.84, 16.40, 26.25, 32.80, 49.21']
order code expansion .XXXX = length in dm
ex.: 8.M5861.3132.3112.0030 (for cable length 3 m)

e Interface / resolution / supply voltage
3 = 4 ... 20 mA / 12 bit / 10 ... 30 V DC
4 = 0 ... 10 V / 12 bit / 15 ... 30 V DC
5 = 0 ... 5 V / 11 bit / 10 ... 30 V DC

f *Measuring range*
1 = 16 revolutions / cw
2 = 16 revolutions / ccw
3 = scalable up to 65,536 revolutions, with limit switch function / cw
4 = scalable up to 65,536 revolutions, without limit switch function / cw
5 = scalable up to 65,536 revolutions, with limit switch function / ccw
6 = scalable up to 65,536 revolutions, without limit switch function / ccw

Optional on request
- Ex 2/22 (only for connection type 4)

1) Output circuit "3" only in conjunction with interface "3", output circuit "4" only in conjunction with interface "4" or "5".
2) Special terminal assignment.

© Fritz Kübler GmbH, subject to errors and changes. 11/2023

Standard electronic multiturn, magnetic	Sendix M5861 (shaft)	Analog

Mounting accessory for shaft encoders		Order no.
Coupling	Bellows coupling ø 19 mm [0.75“] for shaft 10 mm [0.39“]	**8.0000.1102.1010**

Cables and connectors		Order no.
Preassembled cables	M12 female connector with coupling nut, 5-pin, A coded, straight single ended 2 m [6.56‘] PVR cable	**05.00.6081.2211.002M**
Connectors	M12 female connector with coupling nut, 5-pin, A coded, straight (metal)	**8.0000.5116.0000**

Further Kübler accessories can be found at: kuebler.com/accessories
Further Kübler cables and connectors can be found at: kuebler.com/connection-technology

Technical data

Electrical characteristics current interface 4 ... 20 mA

Supply voltage		10 ... 30 V DC
Current consumption (no load)		max. 30 mA
Reverse polarity protection of the supply voltage		yes
Short-circuit proof outputs		yes [1]
Measuring range	factory setting optionally scalable	2^4 revolutions up to 2^{16} revolutions
DA converter resolution		12 bit
Angular measurement deviation [2]		±0,5°
Temperature coefficient		< 100 ppm/K
Repeat accuracy, at 25 °C [77 °F]		±0.2°
Output load	at 10 V DC at 24 V DC at 30 V DC	max. 200 Ohm max. 900 Ohm max. 1200 Ohm
Setting time		< 1 ms, R_{Burden} = 900 Ohm, 25°C [77°F]
LEDs (green/red)		- system status - current loop interruption – input load too high - reference point display (only with factory settings) at cw: betw. 0° and 1° at ccw: betw. 0° and -1° - status in teach mode
Options		- output signal scalable via the teach inputs - output signal scalable via the teach inputs + limit switch function
Teach inputs		level = +V for 1 s minimum
PowerON Time		< 1 s
Update rate		1 ms

Electrical characteristics voltage interface 0 ... 10 V / 0 ... 5 V

Supply voltage	output 0 ... 5 V output 0 ... 10 V	10 ... 30 V DC 15 ... 30 V DC
Current consumption (no load)		max. 30 mA
Reverse polarity protection of the supply voltage		yes
Short-circuit proof outputs		yes [1]
Measuring range	factory setting optionally scalable	2^4 revolutions up to 2^{16} revolutions
DA converter resolution	0 ... 10 V 0 ... 5 V	12 bit 11 bit
Angular measurement deviation [2]		±0,5°
Temperature coefficient		< 100 ppm/K
Repeat accuracy, at 25°C [77°F]		±0.2°
Current output		max. 10 mA
Setting time		< 1 ms, R_{Load} = 1000 Ohm, 25°C [77°F]
LEDs (green/red)		- system status - reference point display (only with factory settings) at cw: betw. 0° and 1° at ccw: betw. 0° and -1° - status in teach mode
Options		- output signal scalable via the teach inputs - output signal scalable via the teach inputs + limit switch function
Teach inputs		level = +V for 1 s minimum
PowerON Time		< 1 s
Update rate		1 ms

1) When the supply voltage is correctly applied.
But not output to +V. Supply voltage and sensor output signal are not galvanically isolated.
2) Over the whole temperature range.

© Fritz Kübler GmbH, subject to errors and changes. 11/2023

Standard
electronic multiturn, magnetic | **Sendix M5861 (shaft)** | **Analog**

Mechanical characteristics

Maximum speed		4000 min^{-1} 2000 min^{-1} (continuous)
Starting torque at 20 °C [68 °F]		< 0.01 Nm
Shaft load capacity	radial axial	80 N 40 N
Weight		approx. 280 g [9.88 oz]
Protection acc. to EN 60529/DIN 40050-9		IP65
Working temperature range		-40 °C ... +85 °C [-40 °F ... +185 °F]
Materials	shaft flange housing cable	V2A aluminum zinc die-cast PVC
Shock resistance acc. to EN 60068-2-27		5000 m/s^2, 4 ms
Vibration resistance acc. to EN 60068-2-6		300 m/s^2, 10 ... 2000 Hz

Approvals

E1 compliant in accordance with	ECE guideline
UL compliant in accordance with	File no. E224618
CE compliant in accordance with	
EMC Directive	2014/30/EU
RoHS Directive	2011/65/EU
ATEX Directive	2014/34/EU (for Ex 2/22 variants)

Example (output signal evolution) – factory setting

Measuring range 1 (cw version)

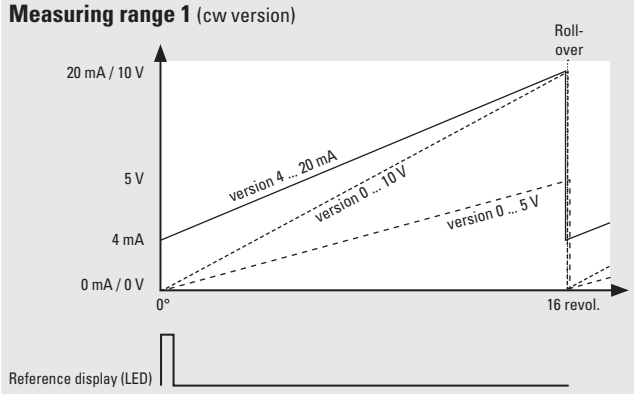

Measuring range 2 (ccw version)

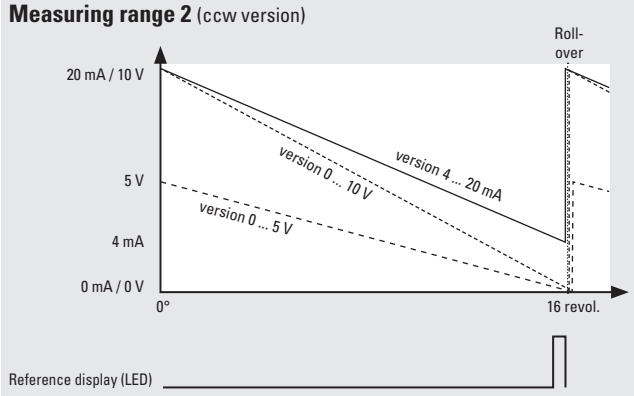

Example (output signal evolution) – option: scalable

Measuring range 4, 6 (scalable version without limit switch function)

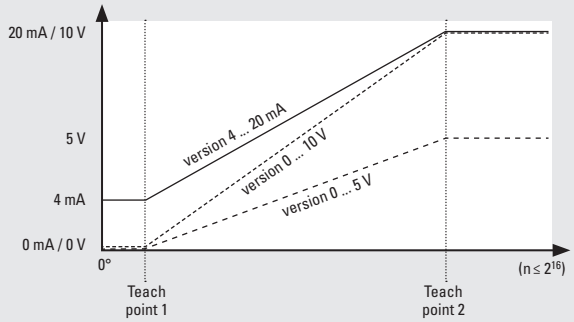

no reference point display!

Measuring range 3, 5 (scalable version with limit switch function)

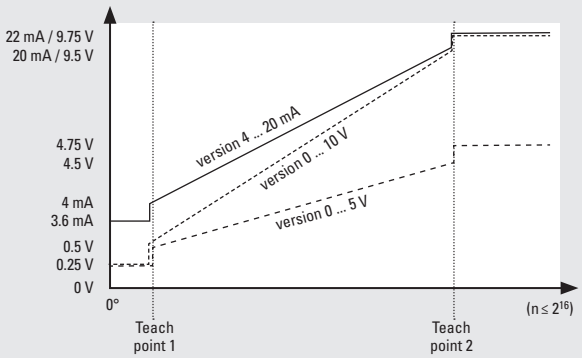

no reference point display!

Factory-set measuring range		2^4 revolutions with roll-over		
Limit switch function	version	**0 ... 10 V**	**0 ... 5 V**	**4 ... 20 mA**
	limit switch low	0.25 V	0.25 V	3.6 mA
	limit switch high	9.75 V	4.75 V	22.0 mA

1) For scalable version.

© Fritz Kübler GmbH, subject to errors and changes. 11/2023

Standard
electronic multiturn, magnetic | **Sendix M5861 (shaft)** | **Analog**

Terminal assignment

Interface	Type of connection	Cable (isolate unused wires individually before initial start-up)					
3 (current)	2, B	Signal:	0 V	+V	+I	SET 1 [1]	SET 2 [1]
		Cable color:	WH	BN	GN	GY	PK

Interface	Type of connection	M12 connector, 5 pin					
3 (current)	4	Signal:	0 V	+V	+I	SET 1 [1]	SET 2 [1]
		Pin:	3	2	1	5	4

Interface	Type of connection	M12 connector, 5 pin					
3 (current)	D	Signal:	0 V	+V	+I	SET 1 [1]	SET 2 [1]
		Pin:	3	1	2	4	5

Interface	Type of connection	Cable (isolate unused wires individually before initial start-up)					
4, 5 (voltage)	2, B	Signal:	0 V	+V	+U	SET 1 [1]	SET 2 [1]
		Cable color:	WH	BN	GN	GY	PK

Interface	Type of connection	M12 connector, 5 pin					
4, 5 (voltage)	4	Signal:	0 V	+V	+U	SET 1 [1]	SET 2 [1]
		Pin:	3	2	1	5	4

Interface	Type of connection	M12 connector, 5 pin					
4, 5 (voltage)	D	Signal:	0 V	+V	+U	SET 1 [1]	SET 2 [1]
		Pin:	3	1	2	4	5

+V : encoder power supply +V DC
0 V : encoder power supply ground GND (0 V)
+U : voltage
+I : current
SET 1 : set input for teachpoint 1
SET 2 : set input for teachpoint 2

Top view of mating side, male contact base

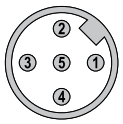

M12 connector, 5-pin

© Fritz Kübler GmbH, subject to errors and changes. 11/2023

Standard electronic multiturn, magnetic	Sendix M5861 (shaft)	Analog

Dimensions

Dimensions in mm [inch]

Clamping flange, ø 58 [2.28]
Flange type 3

1 3 x M4
2 3 x M3

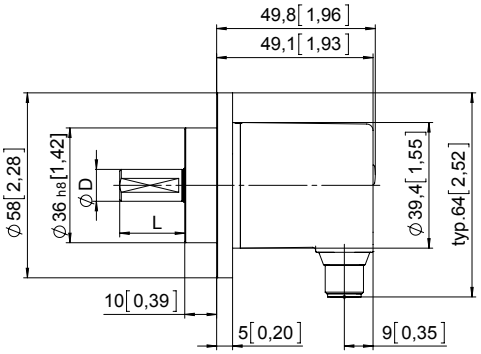

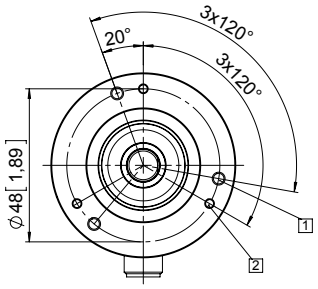

D	Fit	L
6 [0.24]	h7	12.5 [0.49]
10 [0.39]	h7	20 [0.79]

Synchro flange, ø 58 [2.28]
Flange type 4

1 3 x M4, 10 [0.39] deep

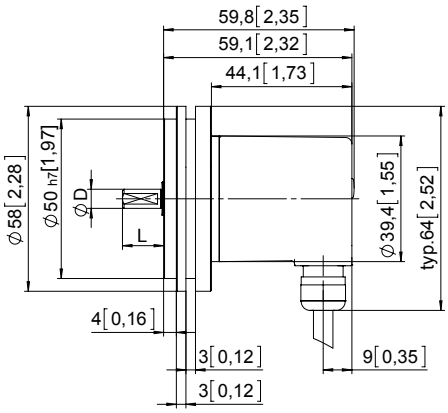

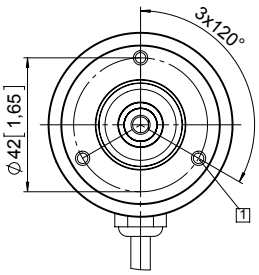

D	Fit	L
6 [0.24]	h7	12.5 [0.49]
10 [0.39]	h7	20 [0.79]

© Fritz Kübler GmbH, subject to errors and changes. 11/2023